Aspen CG6

High Performance Cooled CCD Camera System

ANDOR
an Oxford Instruments company

System Features[*1]

- **High Resolution Sensor**
  1 Megapixel sensor with large 24 µm pixels delivers a large field of view with high resolution.
- **Programmable TE cooling down to 60°C below ambient**
  Ideal for detection of weak chemiluminescence or astronomy images, enabling long exposure acquisitions with optimized signal to noise ratio.
- **Ethernet interface with built-in web server**
  Remote access and control over the Internet, via standard web browser.
- **USB 2.0 interface**
  Direct 'Plug and Play' simplicity of USB 2.0.
- **16-Bit digitization**
  High photometric accuracy.
- **High longevity shutter**
  Shutter during readout and take dark reference frames - 58 mm.
  Specified for >5 million cycles.
- **Programmable I/O port**
  Synchronization with intricate experimental set-ups.
- **Remote Triggering**
  LVTTL input allows exposure to start within 25 microseconds of the rising edge of the trigger.
- **Focusing mode**
  Faster readout option, ideal for focus optimisation.
- **Precision locking filter wheels optional**
  Choose from a range of Apogee family filter wheels with up to 17 positions.

Apogee Aspen CG6: Compact,1 Megapixel CCD

Ideally suited to challenging astronomy and physical science imaging applications, the Apogee Aspen family offers a range of popular full frame and interline CCD sensors, within a camera platform that is designed to push performance. Deep thermoelectric cooling ensures optimal sensitivity for long exposure applications. The simple convenience of a USB 2.0 interface is accompanied by an Ethernet network interface with a built-in web server. The Apogee Aspen also utilizes a new extremely high reliability shutter, specified for > 5 million shutter cycles.

The Aspen CG6 uses the low noise version of the 1 megapixel KAF-1001E CCD sensor featuring large 24 µm pixels, high dynamic range and quantum efficiency. Cooling down to 60°C below ambient results in a low dark current contribution. These features combine to make the Aspen CG6 an ideal solution for many demanding astronomy and physical science applications.

Specifications Summary[*1]

Array Size (pixels)	1024 x 1024 (1Megapixel)
Pixel Size	24 x 24 µm
Sensor Size	24.6 x 24.6 mm (604 mm^2) 34.8 mm diagonal
Pixel Well Depth (typical)	203,000 e^-
Dark Current[*2]	0.03 e^-/pixel/sec
Read Noise[*3]	9.3 e^- (RMS @ 0.84 Mhz)
Maximum Dynamic Range	86.8 dB (21829:1)
Quantum Efficiency	>72% maximum @560 nm

SPECIFICATIONS

Technical Specifications[*1]

Sensor Type	KAF-1001 (ON Semi-conductor)
Active pixels	1024 x 1024 W x H (1 Megapixel)
Sensor Size	24.6 x 24.6 mm (604 mm^2) 34.8 mm diagonal
Pixel Size	24 x 24 µm
Pixel Well Depth	203,000 e^-
Read Noise [*3]	9.3 e^- (RMS @ 0.84 MHz)
Pixel Binning	1 x 1 to 8 x 1024 on chip
Quantum Efficiency[*4]	>72% @560 nm
Cooling	Maximum cooling up to 60°C below ambient temperature; -35°C at 25°C ambient Thermoelectric cooler with forced air.
Temperature Stability	+/- 0.1°C
Dark Current[*3]	0.03 e^-/pixel/sec
Blemish Specification	Grade 2, as per sensor manufacturer definition
Anti-blooming factor	None
Maximum Dynamic Range	86.8 dB (21829:1)
Linearity	Better than 99%
Frame Rate (fps)[*5]	0.75 Full frame (@0.84 MHz) 2.85 Full frame (@3.75 MHz, focusing mode)
Frame Sizes	Full frame, sub-frame
Digital Resolution	16-bit
Camera Window	UV-grade fused silica

General Specifications

Interface Options	USB 2.0 Ethernet: Network interface with built-in web server, up to 2 MHz throughput
Remote Triggering	LVTTL trigger input, expose strobe output
Peripheral communications	8 pin mini-DIN I/O connector
Image Sequencing	1 to 65535 image sequences under software control
Exposure Time	95 minutes (max) (1.33 microsecond increments)
Operating System Support	Windows, Linux

Quantum Efficiency (QE) Curve[4]

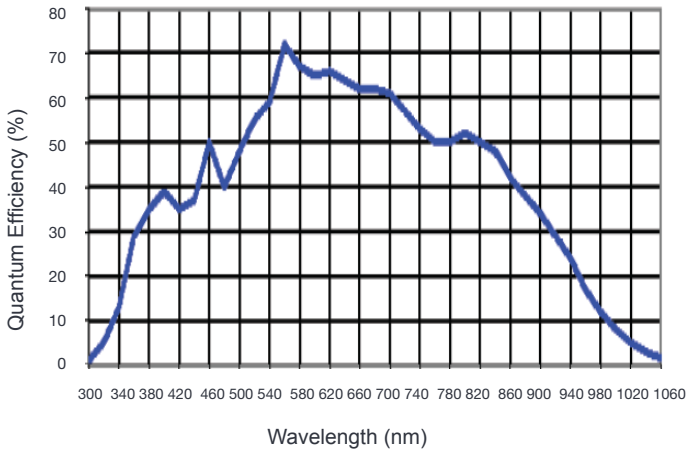

Size of CCD Imaging Area

24.6 x 24.6 mm

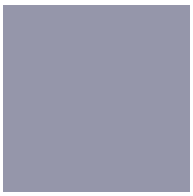

Mechanical Drawings

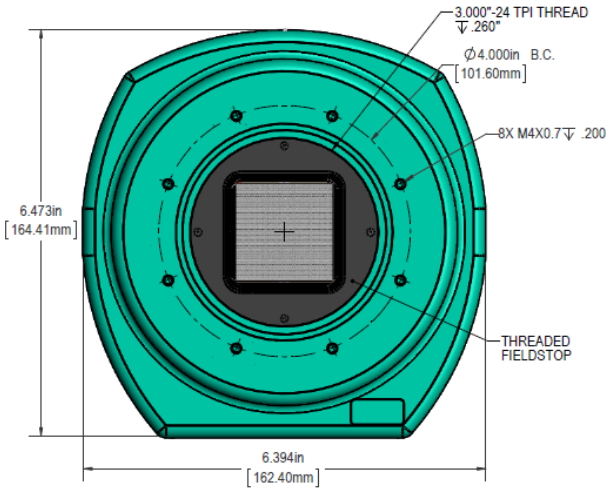

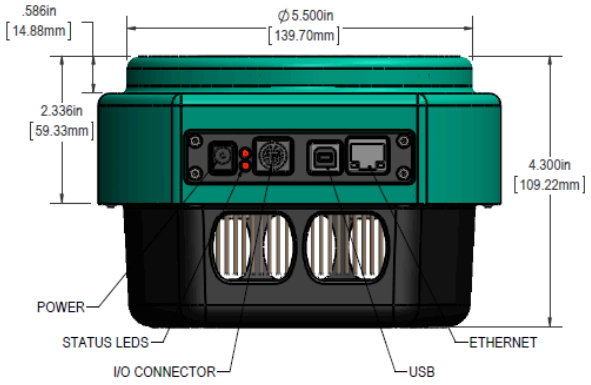

Mechanical Specifications

Camera Housing	Aluminum, hard anodized (G07)
Camera Head Size	6.5” x 6.4” x 4.3” [16.4 x 16.2 x 10.9 cm]
Back Focal Distance	1.01” (12.57 cm) [optical]
Mounting	2.25” Shutter aperture, 3” mounting thread Optional threaded fieldstop and adapters available
Shutter	58 mm shutter (specified for >5 million cycles)
Weight	3.1 lb. (1.4 kg)

CREATING THE OPTIMUM PRODUCT FOR YOU

How to customize the Apogee Aspen CG6:

Step 1: Select your camera type

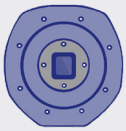

Camera

Description	Code
Apogee Aspen CG6 (Low noise) 1 Megapixel Full frame CCD camera Grade 2 sensor and 58 mm Shutter	CG6-LN-2-G07-S58

Note: Please enquire for price and availability of Grade 1 sensor options.

Step 2: Please indicate which adapters and accessories are required

Adapters & Accessories

A wide range of mounting adapters and accessory options are available for the Aspen. Please refer to the links below on the Andor website for further information on filter wheels, filters and adapters.

Filter Wheels

Filter wheels available with up to 17 filter positions. Please refer to Apogee Filter Wheels

Filters

A comprehensive selection of Astrodon filters and filters are available to complement your selected filter wheel Please refer to Apogee Filters

Lens Adapters and flanges

Select the required camera mounting option for your application, from our range of lens, telescope and slip-fit faceplate adapters. Please refer to Apogee Adapter Matrix

Step 3: Please indicate which software you require

Software

The Apogee Aspen also requires at least one of the following software options:

Description	Ordering Information
Windows SDK for Apogee	Please download from the Apogee Downloads Page
ASCOM Camera and Filter Wheel Driver	Please download from the Apogee Downloads Page
Linux Driver CD	Please download from the Apogee Downloads Page
Maxim DL Pro Software CD	MAXIM-DL/PRO-SW
MicroManager	Please see https://micro-manager.org/wiki/Apogee

Order Today

Need more information? At Andor we are committed to finding the correct solution for you. With a dedicated team of technical advisors, we are able to offer you one-to-one guidance and technical support on all Andor products. For a full listing of our local sales offices, please see: andor.com/contact

Our regional headquarters are:

Europe
Belfast, Northern Ireland
Phone +44 (28) 9023 7126
Fax +44 (28) 9031 0792

Japan
Tokyo
Phone +81 (3) 6732 8968
Fax +81 (3) 6732 8939

North America
Concord, MA, USA
Phone +1 (860) 290 9211
Fax +1 (860) 290 9566

China
Beijing
Phone +86 (10) 8271 9066
Fax +86 (10) 8271 9055

Front page image: Melotte 15 in the Heart Nebula, courtesy of Dan Goldman. Check out other astounding images with Apogee cameras on the Andor website.

Footnotes

1. Figures are typical unless stated otherwise
2. At minimum temperature
3. Readout noise is for the entire system. It is a combination of sensor readout noise and A/D noise.
4. Quantum efficiency of the sensor at 25°C, as supplied by the sensor manufacturer.
5. Assumes internal trigger mode of operation and minimum exposure time.

OXFORD INSTRUMENTS
The Business of Science®

PC Requirements
- 3.0 GHz single core or 2.4 GHz multi core processor
- 2 GB RAM
- 100 MB free hard disc to install software (at least 1GB recommended for data spooling)
- USB 2.0 High Speed Host Controller capable of a sustained rate of 40MB/s
- Windows (7, 8, 8.1 and 10) or Linux (please contact us for specific build compatibility)

Operating and Storage Conditions
- Operating Temperature: 0 to 40°C
- Relative Humidity: < 70% (non-condensing)
- Storage Temperature: -25°C to 50°C
- Altitude up to 2000 m

Power Requirements
- 100-240V, AC 50-60Hz, or alternate 12V input from user's source.
- 75W maximum power consumption (shutter open and cooling maximum)